

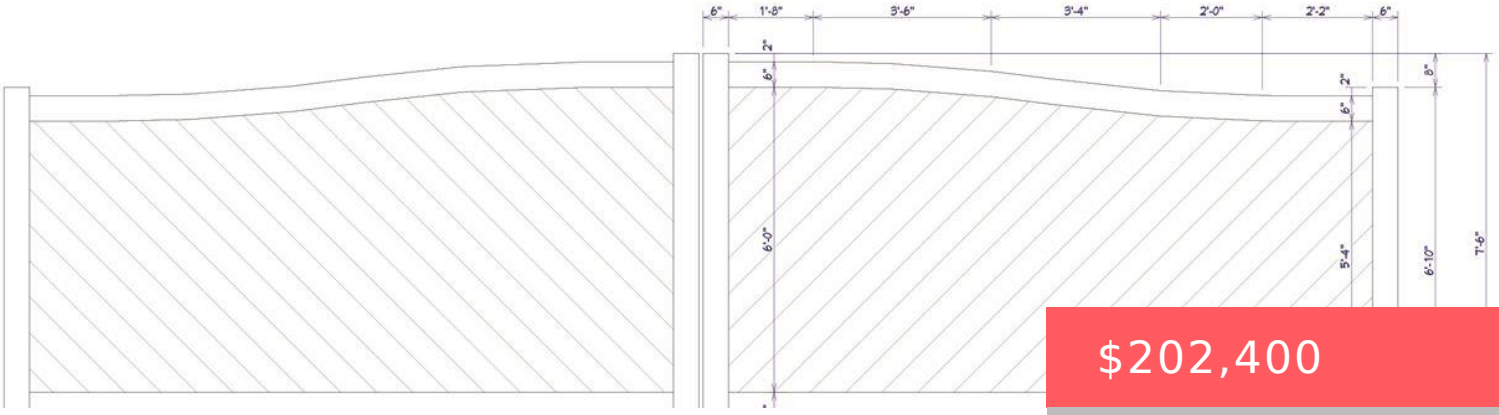

$202,400

- Resi 1 acre or less
- LOTS & LAND, None
- Sold

0 LOT 4 THE WOODS PL SIOUX FALLS SD 57108

https://harr-lemme.com

To be platted TR 9 - NW1/4 22-100-50 *EX LOTS A&B* PINEWOOD ADDITION TO THE CITY OF SIOUX FALLS



Rob Kurtenbach

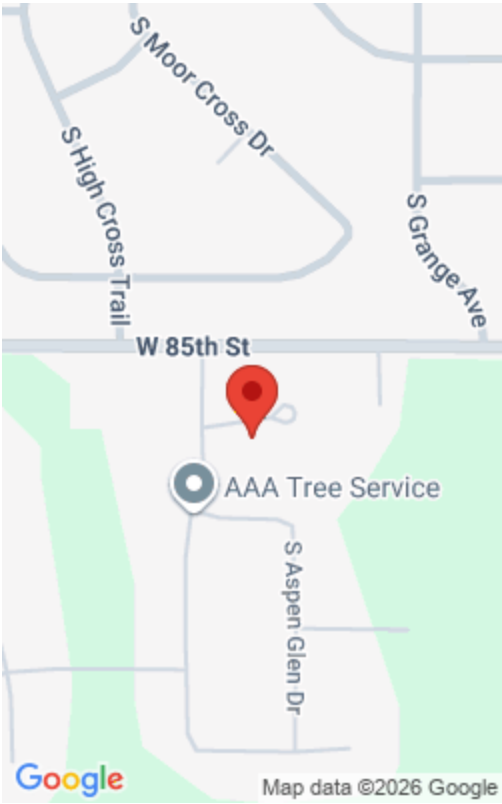

Basics

Status: Sold

Type: Resi 1 acre or less

Category: LOTS & LAND, None

Price per sqft: $8.01

Date added: Added 2 months ago

MLS ID: 21907325

Agent

AgentEmail: rk@benderco.com

AgentPhoneNumber: 605-940-0559

Agent First Name: Rob

AgentMI: W

Agent Last Name: Kurtenbach

Amenities & Features

Amenities: Road Maint